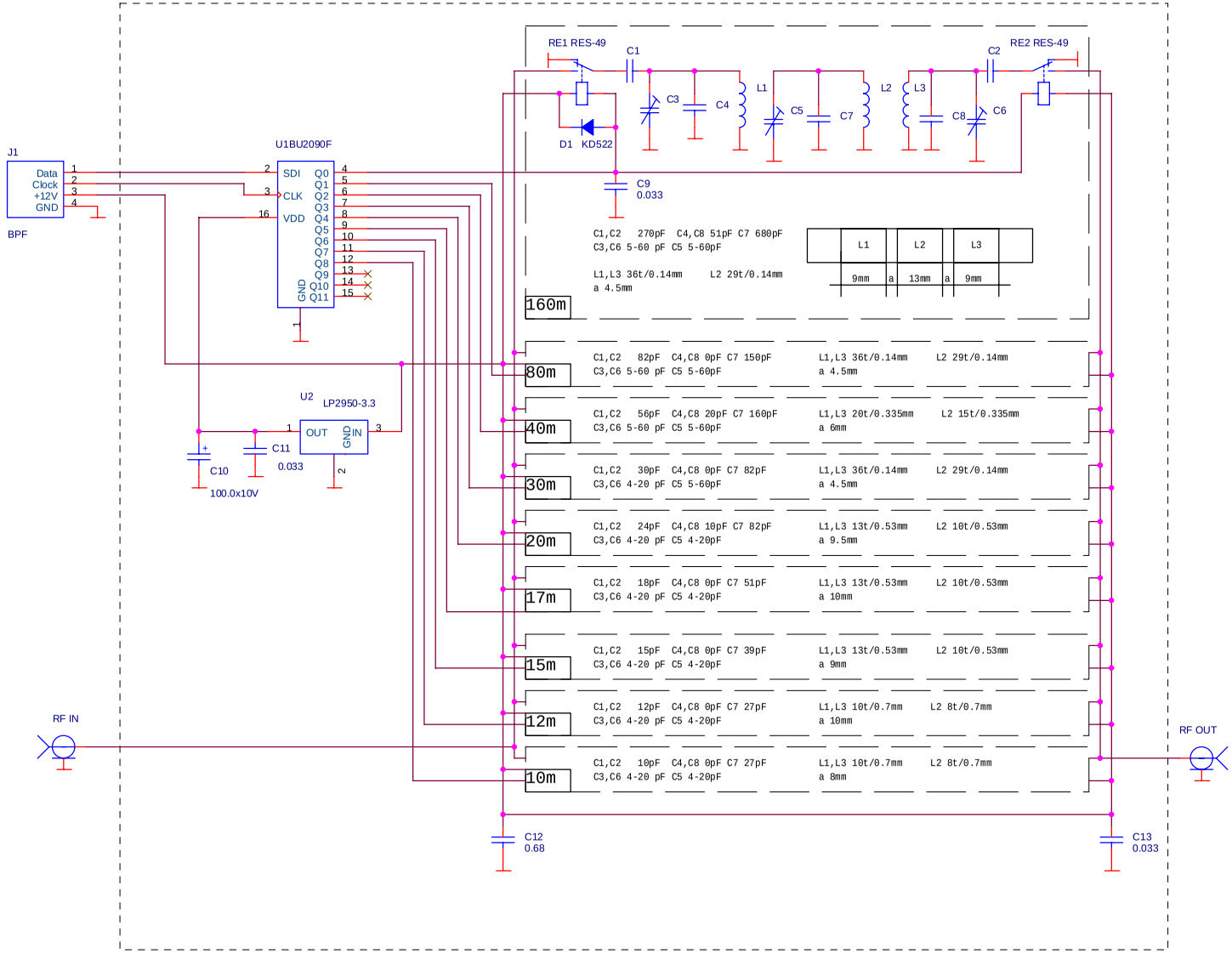

Title	T03DSP - HF Transceiver with DSP IF Processing by UR3IQO	
Size A3	Document Number BPF	Rev B
Date: Saturday, January 24, 2004	Sheet 1 of 12	